RAINER GIEVERS GMBH & CO. KG

Assembly Bracket

Steel, iron blank or refined surface

The shown brackets are product examples. Our tool manufactory allows, often by slight modifications of the existing tools, the production according to your requirements. On this occasion the side lengths can be modified, extra and lateral drillings can be added. Send us your drawings including the quantities and we look forward to making you an offer.

Art.-Nr.
Q: 014022
R: 014023
S: 014024
T: 014025
U: 014026
V: 014027

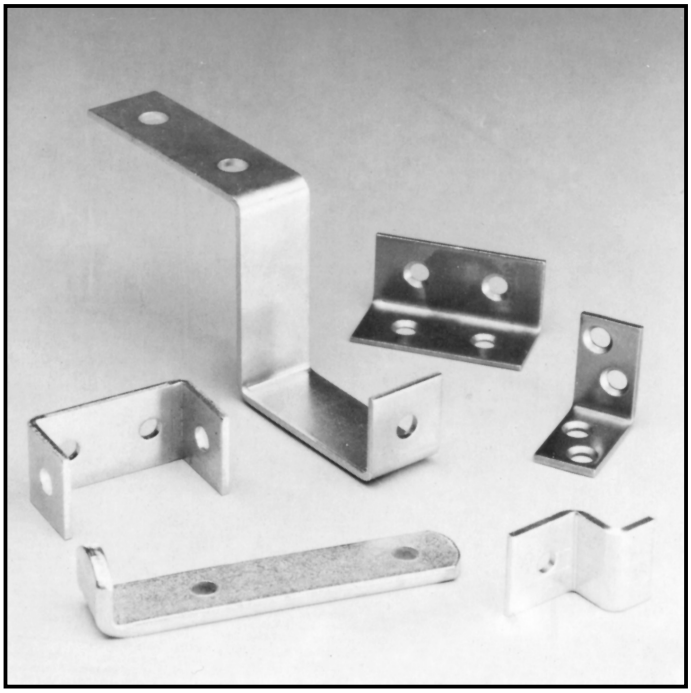

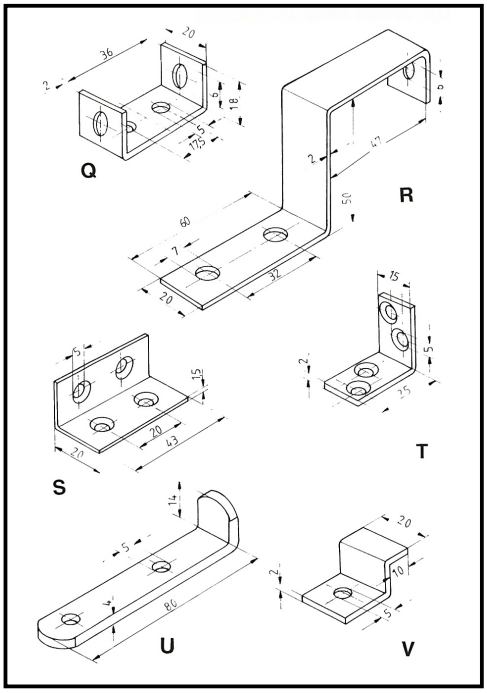

GICO BESCHLÄGE • Rainer Gievers GmbH & Co. KG • Germaniastr. 16 • 33189 Schlangen • Germany
Phone +49 5252 7277 • Telefax +49 5252 7200 • Email info@gico-fittings.com